GAREX TWOMOBILE MK II
TWO-METRE FM/AM TRANSCEIVER

OPERATING MANUAL

SECTION I

INTRODUCTION

The Garex Twomobile is a transmitter-receiver for operation in the 144-146MHz amateur band.

The receiver is fully tunable over the entire band and is capable of receiving both amplitude and frequency (or phase) modulated signals. A fully transistorised double superheterodyne design is used, incorporating a squelch circuit to eliminate background noise in the absence of a signal. The appropriate detector for FM and AM is selected by a switch mounted on the front panel. FM reception employs an integrated circuit quadrature detector.

The transmitter has a nominal input power to the final power amplifier of 15 watts. The audio and oscillator/modulator units are fully transistorised; the multiplier/driver and. power amplifier stages use quick-heat twin tetrodes. The modulation system (phase or amplitude) is selected by a front-panel switch, which is independent of the receiver mode switch, thus readily allowing cross-mode working.

The equipment is designed to operate from a nominal 12V DC supply, conveniently supplied from a vehicle battery. For fixed-station use, a mains-driven power supply delivering 12V DC (stabilised) at 5 amps maximum is required. (Under standby conditions the current consumption is about 0.25A.)

All of the operator's controls are mounted on the front panel. An external loudspeaker is used, any 3 to 5 ohm type being suitable.

THIS DOCUMENT

This handbook was produced by M1FDE using notes and manuscript supplied by GAREX which I asked if I could publish. This is almost the document they would have published, but publishing this document is my responsibility and all communications regarding errors or further information should be addressed to M1FDE.

A.N. Martin M1FDE <at> G0MWT <dot> ORG <dot> UK

This document is DRAFT and preliminary and details are tentative. It will be updated WHEN I've MADE ONE WORK.

SUMMARY OF DATA

Service	A3 or F3 telephony
Frequency Range	144–146MHz
Bandwidth	10 kHz (±5kHz) at 6 dB down
Power Supply	12 volts DC (nominal) Positive or negative ground, or floating,
Power Consumption	RX: 200mA (no signal) TX: (AM) 5A. (FM) 4A
Controls	Power off – Standby – Spot check switch VOLUME control SQUELCH control CHANNEL selector switch RECEIVER TUNING Tx mode (FM or AM) Rx mode (FM or AM) Transmit button (on microphone) Toneburst selector switch (if fitted)
Dimensions	12½" x 5½" x 9" deep
Weight	12½ lbs. (5.7kg)
Optional features	Tone burst generator (1700 or 1750Hz) Up to 6 transmit channels

RECEIVER

Sensitivity	1µV p.d. input for 500mW audio output with signal-to-noise ratio of 12dB.
Audio output	1 watt with less than 10% distortion
Intermediate frequencies	1st IF 10.7MHz. 2nd IF 455kHz, with band pass block filter.
Squelch	An electronic squelch circuit is fitted; it is Carrier operated, and can be adjusted to cut background noise in the absence of a signal.

TRANSMITTER

Power	15 watts input (nominal) to the final power amplifier stage.
Modulation	a) High level amplitude modulation. b) Phase modulation, adjustable up to 15kHz deviation, normally set to ±3kHz.

SECTION I

CIRCUIT DESCRIPTION

RECEIVER

An all-transistor double superheterodyne circuit is used. Two RF amplifiers are followed by a low-noise FET mixer; the first local oscillator is variable over a 2MHz range to allow tuning over the two metre band. The first IF is 10.7MHz which is amplified in three stages and passed to the second mixer also an FET. The second local oscillator is crystal controlled at 10.245MHz, producing the second IF of 455kHz. The second IF is amplified and passed through a bandpass block filter, after which there are a further five stages of amplification. Amplitude modulated signals pass via the detector and noise limiter to the mode selection switch.Frequency modulated signals are taken from the fourth amplifier stage and processed by an integrated circuit quadrature detector. The resultant audio is fed to the mode switch. From this switch the audio passes via the squelch gate to the audio amplifier and output stages.

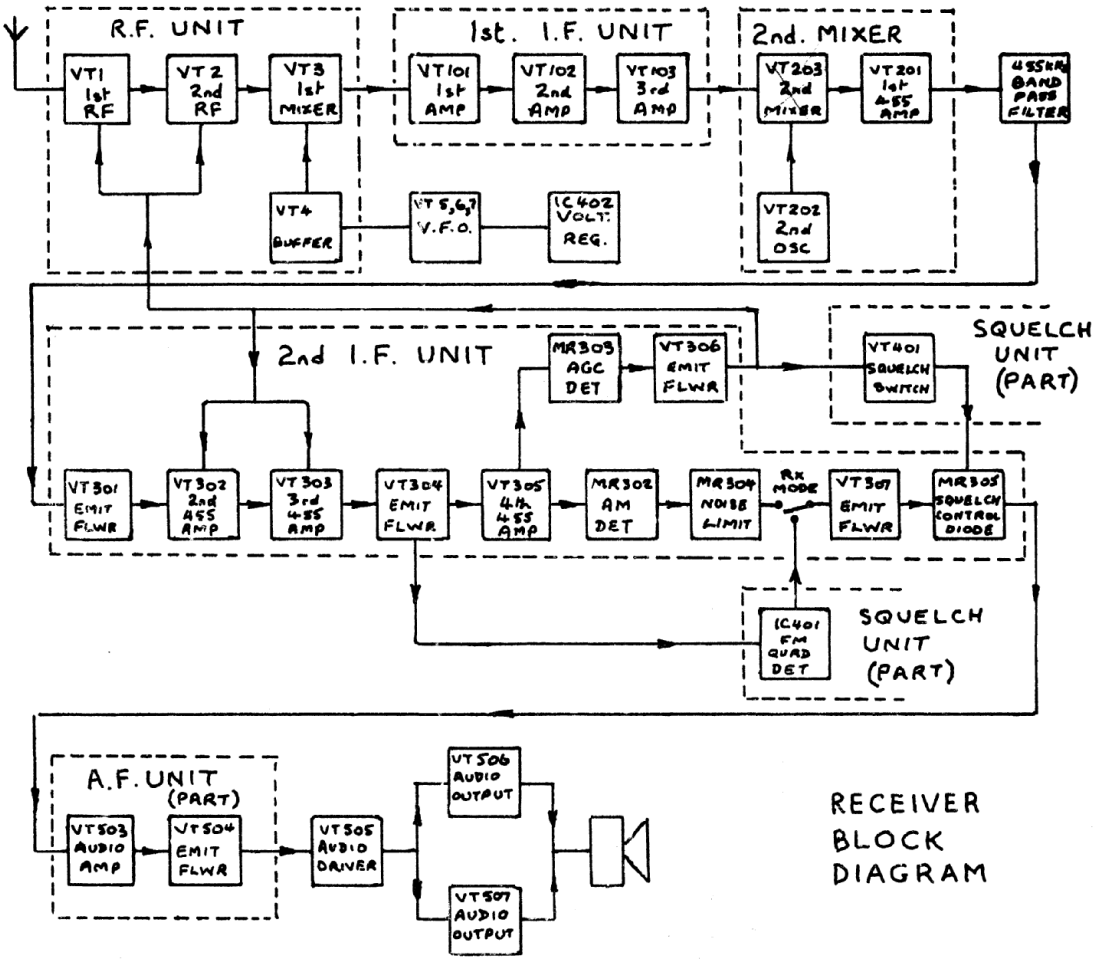

RECEIVER BLOCK DIAGRAM

RF Unit

The antenna changeover relay contacts RLA1 connect the aerial input to the RF amplifiers VT1, VT2 which are coupled to the FET mixer VT3 by the tuned circuit L4. The local oscillator frequency is generated by a temperature compensated FET variable frequency oscillator having a 2MHz tuning range. Buffer stages, including VT4, isolate the wanted frequency. The output from VT3 is the first IF of 10.7MHz.

1st IF Unit

VTI01, VT102, VT103 are transformer coupled cascade amplifiers at 10.7MHz. The output is coupled by transformer T104 to the second mixer VT203.

2nd Mixer Unit

The mixer FET VT203 combines the 10.7MHz first IF with the l0.245 MHz output from the local oscillator VT202, producing the 2nd IF of 455kHz, which passes through a single stage amplifier VT2O1 to the 455kHz bandpass filter.

455kHz Bandpass Filter

This filter is a sealed unit which determines the selectivity of the receiver. The bandwidth is 10kHz (±5kHz) which allows a good compromise between selectivity and satisfactory resolution of frequency modulated signals with a peak deviation of up to ±3kHz.

2nd IF Unit

The output from the bandpass filter is coupled to the two amplifying stages VT302, VT303 and emitter followers VT301, VT304. When receiving amplitude modulated signals a third amplifying stage VT305 is used. Transformer T302 in its collector circuit has two secondary windings, which are connected respectively to the signal detector MR302 and the AGC detector MR303. The rectified output from MR303 is fed back via emitter follower VT306 as AGC bias to the RF stages VT1, VT2, and the IF amplifiers VT302, VT303.

The rectified output from MR302 passes through the noise limiter MR304 the receiver mode selection switch (S2).

Frequency modulated signals are taken from the emitter of VT304 to the input of the quadrature detector IC402. The audio output from IC402 is taken to S2. Audio then passes to the emitter follower VT307 and the squelch diode MR305.

Squelch Unit

VT40l is a switching stage controlled by the AGC bias level. Under no signal conditions VT401 maintains the cathode of MR305 at a level less negative than its anode, which is controlled by VT307, thereby MR305 is prevented from conducting. When a signal is received the AGC voltage becomes less negative allowing MR305 to conduct and permit the audio to pass to the volume control and audio amplifying stages. The setting of VR1 (located on the front panel) determines the emitter voltage of VT401, and thus the level at which the squelch operates.

AF Section

The AF from the volume control VR2 (located on the front panel) is amplified by VT503 and coupled via the emitter—fo1lower VT501, to the driver VT505. Phase splitting transformer T502 in the collector of VT505 drives the push—pull output stage VT505, VT507. T503 is the loudspeaker output transformer.

TRANSMITTER

The RF section of the transmitter comprises a transistorised crystal oscillator and multipliers. The multiplier/driver and power amplifier use quick-heat tetrodes.

Phase Modulation

The output from the crystal oscillator is phase modulated by the variable capacitance diodes and multiplied by the following stages.

Amplitude Modulation

The AF section (part of which is used in the receiver) provides anode and screen modulation of the transmitter power amplifier.

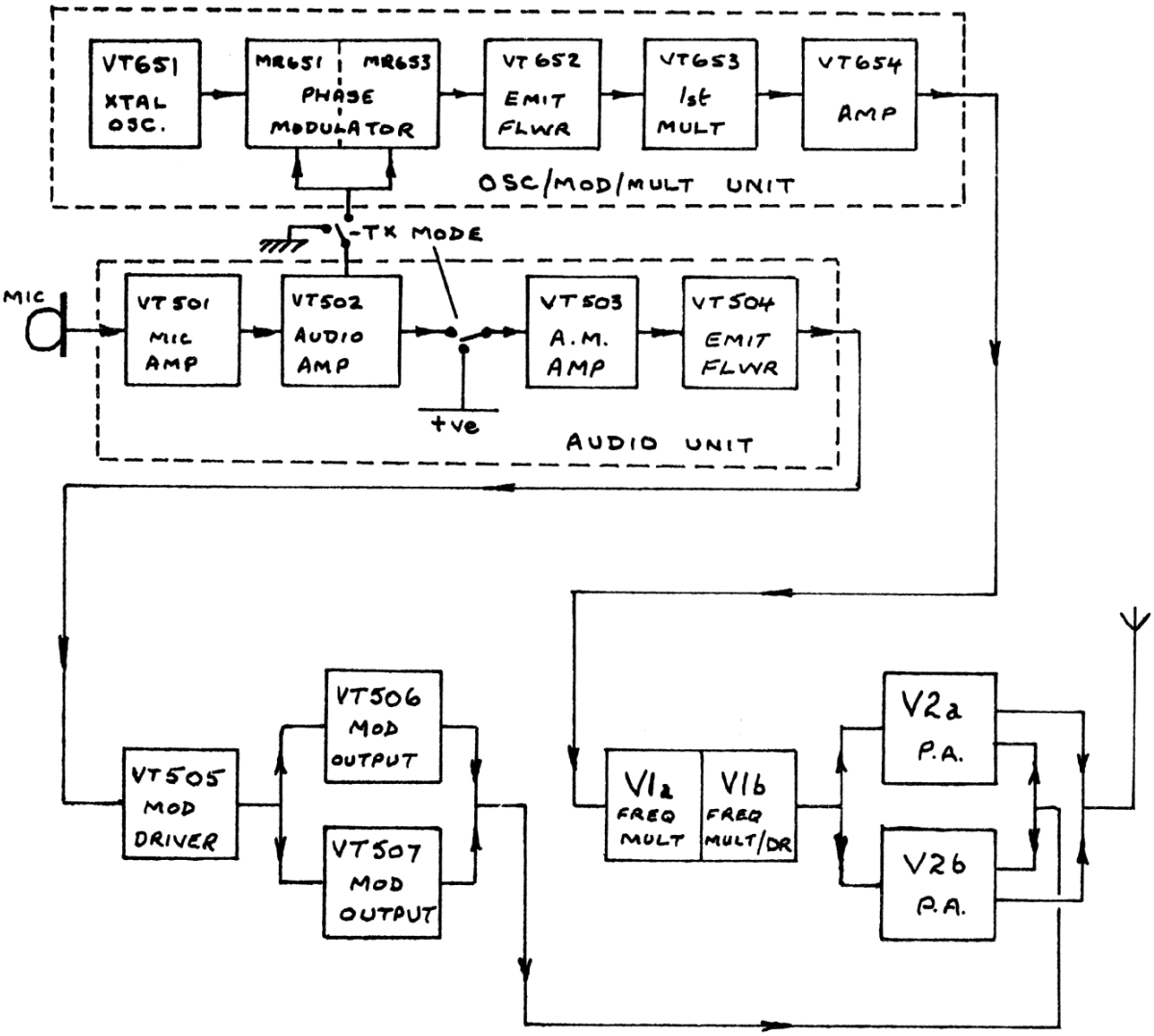

BLOCK DIAGRAM OF TRANSMITTER

AF section

The transistor VT651 is a crystal contro11ed oscillator. The required crystal and trimming capacitor are switched into circuit by the channel switch S1 (located on the front panel). The oscillator is capacity coupled to the phase modulator which is tuned to the crystal frequency. When using phase modulation the microphone output is amplified by VT501, VT502 and the resultant output, limited by MR501, and MR502, is connected to the variable capacitance diodes MR651 and MR653. Capacitance changes at these diodes due to the audio input results in phase modulation of the carrier. The AF input to these diodes is shorted out when using amplitude modulation.

The emitter follower VT652 matches the impedance of the phase modulator to the frequency multiplier and buffer stages. VT654 is coupled by means of a pi-network to the two final multiplier stages V1a and V1b. The amplifier V2 is a twin tetrode operating in push-pull. The output from its tank circuit is fed to the antenna via the coupling coil L609 and the relay contact RLA1.

AF Section (phase modulation)

Output from the microphone is amplified by VT50I and VT502 coupled by T501 to the series diodes MR5OI and MR502 which limit the audio, and hence the peak deviation. After limiting, the audio is taken through a lowpass filter, integrated by R511 and C508, and via the peak deviation control VR501 to the variable capacitance diodes MR651 and MR653.

AF Section (amplitude modulation)

The microphone output is amplified as described above. After limiting, the audio passes to the potential divider R515 and R516. The required audio level from the divider is fed via the relay contacts RLB2 to the amplifier and driver stages VT503, VT504, VT505. The phase-splitting transformer T502 couples the driver to the push—pull stage VT506, VT507. The relay contacts RLB3 and RLB1 connect the output from the push-pull stage to the modulation transformer T501. A secondary winding on T502 provides anode and screen modulation of the RF power amplifier V2.

Modulation Switching

Switch S3 (located n the front panel) selects the required modulation mode. In the phase modulation position, the output from the potential divider R515 and R516 is shorted out by S3a effectively blocking the passage of audio to the amplitude modulation stages. In the amplitude modulation position, S3b shorts the peak deviation control VR5O1, preventing audio from reaching the variable capacitance diodes MR651 and MR653.

POWER SUPPLY SECTION

The 12V DC supply is connected to the equipment via the 7A fuses FS1, FS2 and the power switch SI on the front panel. When the equipment is switched on the positive and negative sides of the supply are connected to the receiver and the green lamp illuminates. The positive side of the supply is connected to the DC converter.

The DC converter consists of VT70I, VT702 in a push—pull blocking oscillator circuit. AC is developed in the secondary of T701, rectified by a full—wave bridge rectifier MR70I(a-d) and smoothed by C7O1, R701, C702a and C702b. Another secondary winding provides heater supplies for v601, V602 via a choke-capacitor filter. When the transmit button on the microphone is pressed the transmit relay RLB is energised, RLB1 changes over to break the negative supply to the receiver and connects it to the converter to provide the HT and heater supplies to the transmitter valves. The red TX lamp is connected in parallel with the energising coils of RLA and RLB and illuminates when the microphone switch is operated.

Reversed Polarity Protection

A selenium rectifier MR702 is connected across the DC supply when the power switch is on and is normally non-conducting. If the supply polarity is reversed, MR702 will conduct and blow one or both of the supply fuses. It is vital that the correct fuses are fitted (7A rating, 16mm belling-lee).

RELAYS

The coils of the relays RLA and RLB are each connected to the negative side of the 12v supply. The positive side is connected to the rel&ys via the microphone press—to-talk switch.

RLA is the antenna changeover relay and transfers the antenna connection from the receiver input to the transmitter output.

RLB is the transmit relay.

RLB1 transfers the 12V negative supply from the receiver to the DC converter.

RLB2 transfers the input connection to the audio amplifier (VT503) from the receiver volume control to the output from microphone preamplifier (VT502).

RLB3/RLB4 transfers the AF output from the loudspeaker transformer T503 to the modulation transformer T504.

SECTION III

OPERATION

Before operating the equipment, remove the outer case and check that all valves, crystals, lamp holders and hinged printed circuit boards are firmly seated in position and that no damage has occurred in transit.

The outer case is secured by the 6BA screw located at the top centre of the front panel. The feet beneath the case should also be removed by unscrewing their 6BA screws, to avoid fouling the lower edge of the rear panel. The unit may now be withdrawn from the case in a forward direction, taking care that the flange at the top front of the case does not foul components mounted high in the chassis assembly, in particular the power switch, audio smoothing electrolytic and voltage regulator panel (if this is fitted above the modulation transformer).

To reassemble, reverse the procedure, ensuring that the correct number of packing washers are used on the screws fixing the feet.

The red supply lead must be connected to the positive terminal of the. 12V DC supply and the black supply lead to the negative. Reversal of these connections will blow one or both of the 7A fuses. It is important to ensure that the correct rating and type of fuse is used as a replacement.

The supply voltage for alignment and test purposes is 13.2V measured at the input to the equipment.

Receiver

Connect a 3—5 ohm loudspeaker to the terminal block on the outside of the rear panel. With the 12V DC supply connected as above, turn the power switch to 'ON'. The green pilot light should illuminate and upon turning the squelch and volume controls in a clockwise direction receiver noise should be heard. Connect a suitable antenna (50 ohm impedance) to the antenna socket. The tuning dial is directly calibrated for the 2 metre band. Set the Rx mode switch to 'FM' or 'AM' as required. For general band-searching it is suggested that this switch be kept in the 'FM' position; signals are then easily located by the quietening of the background noise when tuned to the centre of the carrier. AM signals are resolved instantly by switching modes. When receiving frequency modulated signals having a deviation in excess of ±5kHz some distortion will result.

To silence the Rx noise in the absence of a signal turn the squelch control carefully anticlockwise until muting just occurs.

TRANSMITTER

Do not operate the transmitter unless an antenna or dummy load is connected to the antenna socket.

Select the appropriate crystal by setting the channel switch on the front panel. Turn the power switch to 'SPOT' and tune the receiver to the nominal transmitter frequency. A strong carrier should be heard. Reset the power switch to 'ON', when the carrier should disappear.

Select the required transmit mode, listen briefly to the receiver to verify that the selected channel is clear, then press the transmit button on the microphone. It should be possible to hear a whine from the DC converter. Wait for approximately one second for the quick-heat valves to reach operating temperature, then speak at normal voice level across the face of the microphone at a distance of 2—3 inches (do not speak directly at the face of the microphone).

When first using a particular sntenna system the transmitter should be correctly loaded to the antenna as follows:

using field strength meter or reflectometer (VSWR meter) adjust the antenna trimmer (accessible through the side of the case) for maximum radiation.

The Twomobile transmitter is designed for intermittent operation, and especially when using amplitude modulation, long periods of transmission should be avoided. If used as a fixed station, where long periods of transmission are more prevalent than under mobile conditions there is some merit in reducing the power input to the final power amplifier by about 20% (see Tx adjustments). Adequate ventilation, especially of the PA and driver area is essential.

SECTION IV

SERVICING & TESTING

Do not attempt realignment without adequate test equipment. Remember that most faults do not necessitate realignments. The majority of faults can be located readily with simple test equipment and a logical approach.

General Checks

Remove the case as described in Section III and carry out a physical inspection for obvious defects.

Check the supply voltage at the input to the equipment.

Check the antenna and connections.

Receiver

Locate the positive and negative supply inputs to each Rx board and check that the appropriate voltage is present. Typical voltages at various points are shown on the circuit diagrams. For the detailed alignment procedure, refer to the receiver alignment chart.

Transmitter

Typical voltages at various points are shown on the circuit diagram. Voltages are –ve referenced to supply +ve.

The transmitter should maintain its performance over a bandwidth of about 500kHz. Some adjustments to the tuning of the RF stages will be necessary when changing to a different segment of the 2 metre band. Refer to the transmitter alignment chart for details.

TRANSMITTER ALIGNMENT CHART

REF	TEST POINT	ADJUSTMENT	TYPICAL READING
1		REMOVE V2	
		CONNECT METER (2·5V RANGE) BETWEEN TP AND −VE.	
2 & 3	TP 651	SET CORES IN MID POSITION ADJUST ALTERNATELY (½ TURN AT A TIME) INTO BOARD UNTIL INDICATION IS OBTAINED THEN ADJUST ALTERNATELY FOR MAXIMUM	+VE
5	TP651	ADJUST FOR MINIMUM (DIP)	
		CONNECT METER (2·5V RANGE) BETWEEN TP652 AND −VE.	
4	TP652	ADJUST FOR MAXIMUM	
5	TP652	ADJUST FOR MAXIMUM	+0·5VOLT
		CONNECT METER (2·5V RANGE) BETWEEN TP604 & CHASSIS.	
6	TP604	ADJUST FOR MAXIMUM	−0·5VOLT
		CONNECT METER (2·5V RANGE) BETWEEN TP605 & CHASSIS	
7	TP605	ADJUST FROM TOP OF CHASSIS FOR INDICATION	−VE
8	TP605	ADJUST FROM UNDERSIDE OF CHASSIS FOR MAXIMUM	
7 & 8	TP605	ADJUST ALTERNATELY FOR MAXIMUM	−0·7VOLT
1		REPLACE V2	
		CONNECT POWER OUTPUT METER TO ANTENNA SOCKET. CONNECT METER (2·5V RANGE) BETWEEN TP606 & CHASSIS.	
9	TP606	ADJUST FOR INDICATION	−VE
9 & 10	TP606	ADJUST TOGETHER FOR MAXIMUM	
11 & 12	TP606	ADJUST TOGETHER FOR MAXIMUM	−1·5VOLT
13		ADJUST FOR MAXIMUM RF OUTPUT.	
14		ADJUST FOR MINIMUM RF OUTPUT	
		CONNECT METER (2·5V RANGE) BETWEEN TP607 AND TP608	
13	TP607 TP608	ADJUST FOR MINIMUM	<0·5VOLT
14	TP607 TP608	ADJUST FOR MAXIMUM RF OUTPUT. CHECK THAT METER READING IS BETWEEN +0·55 AND +0·65 VOLT	5 WATTS MINIMUM
		IF METER READING OR RF OUTPUT IS NOT WITHIN LIMITS REPEAT FOLLOWING PROCEDURE UNTIL 5 WATTS RF OUTPUT IS OBTAINED WITH A METER READING OF +0·55 TO +0·65 VOLT	
15		REMOVE PA BOTTOM COVER ADJUST ANTENNA COUPLING COIL TO OBTAIN MAXIMUM RF POWER WITHIN ABOVE VOLTAGE LIMITS. REPLACE COVER AND REPEAT FROM REFERENCE 9 ONWARDS	

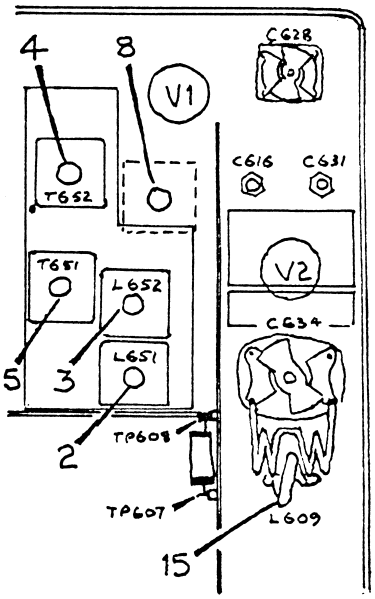

UNDERSIDE OF CHASSIS

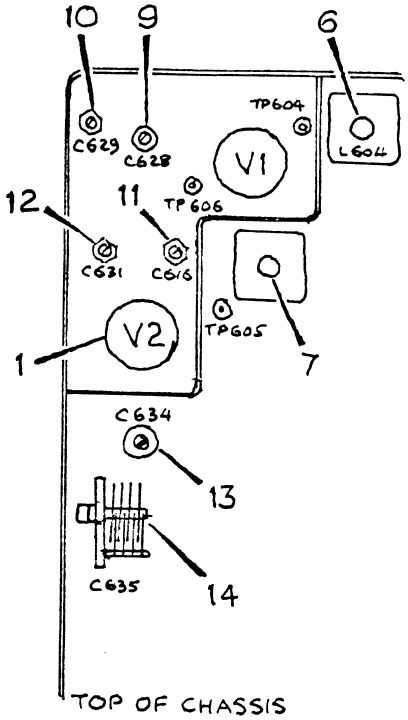

TOP OF CHASSIS

NB. ADJUSTMENTS UP TO REF. 5 MAY BE CONDUCTED WITH THE 'POWER' SWITCH IN THE 'SPOT' POSITION INSTEAD OF PRESSING THE MICROPHONE BUTTON.

RECEIVER ALIGNMENT CHART

REF	ADJUSTMENT
	SET THE RECEIVER MODE SWITCH TO 'AM' SET THE TUNING DIAL TO 145·0 MHz CONNECT A TEST METER (50μA RANGE) BETWEEN THE DIODE CURRENT TEST POINT AND +VE LINE. CONNECT THE SIGNAL GENERATOR TO THE ANTENNA SOCKET AND ADJUST THE FREQUENCY AND OUTPUT TO OBTAIN A METER READING OF ABOUT 10μA. DURING THE ALIGNMENT OPERATION REDUCE THE OUTPUT OF THE GENERATOR TO PREVENT THE METER READING EXCEEDING 16μA.
1 & 2	ADJUST FOR MAXIMUM DIODE CURRENT.
	HINGE UP 2ND I.F. UNIT
3	ADJUST FOR MAXIMUM DIODE CURRENT
	REPLACE AND LOCK 2ND I.F. UNIT
4 TO 9	ADJUST IN SEQUENCE FOR MAX. DIODE CURRENT
	CONNECT METER (1mA RANGE) IN PLACE OF LINK BETWEEN PIN 1 OF 1ST. I.F. UNIT AND PIN 3 OF RF. UNIT.
10 & 11	ADJUST FOR MAXIMUM METER READING (0·7mA APPROX)
	REMOVE TEST METER AND REPLACE LINK
	RECONNECT METER TO DIODE CURRENT TEST POINT AS ABOVE.
12 TO 15	ADJUST IN SEQUENCE FOR MAXIMUM DIODE CURRENT
	SET RECEIVER MODE SWITCH TO 'FM' HINGE UP 2ND I.F. AND AUDIO BOARDS ADJUST FREQUENCY AND OUTPUT OF SIGNAL GENERATOR TO OBTAIN NOISE QUIETING OF AUDIO OUTPUT
16	ADJUST FOR MAXIMUM QUIETING
17	CHECK THAT VOLTAGE AT PIN 8 OF IC401 IS APPROXIMATELY -5 VOLTS WITH RESPECT TO +VE LINE
	REPLACE AND LOCK 2ND I.F. AND AUDIO UNITS
12 TO 15	CHECK THE RECEIVER PERFORMANCE AT DIAL SETTINGS 144·0 MHz AND 146·0 MHz. STAGGER-TUNE TO GIVE AN EVEN PERFORMANCE OVER THE BAND IF NECESSARY

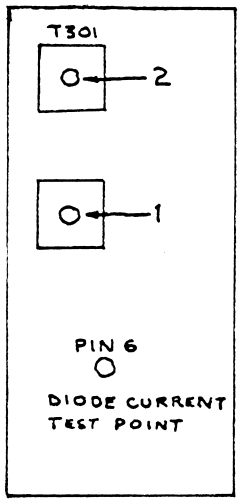

2nd I.F. UNIT

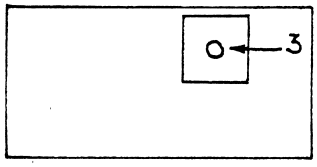

2nd MIXER UNIT

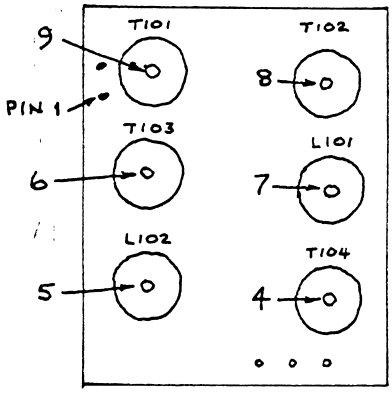

1st. I.F. UNIT

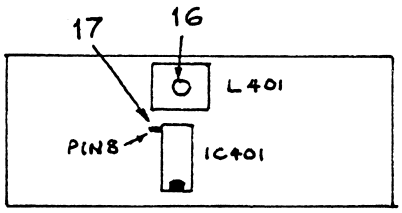

F.M. DETECTOR

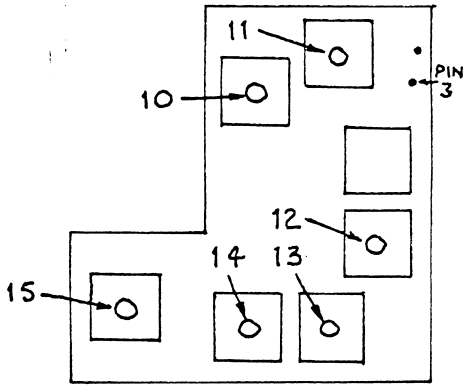

R.F. UNIT

SCHEMATICS

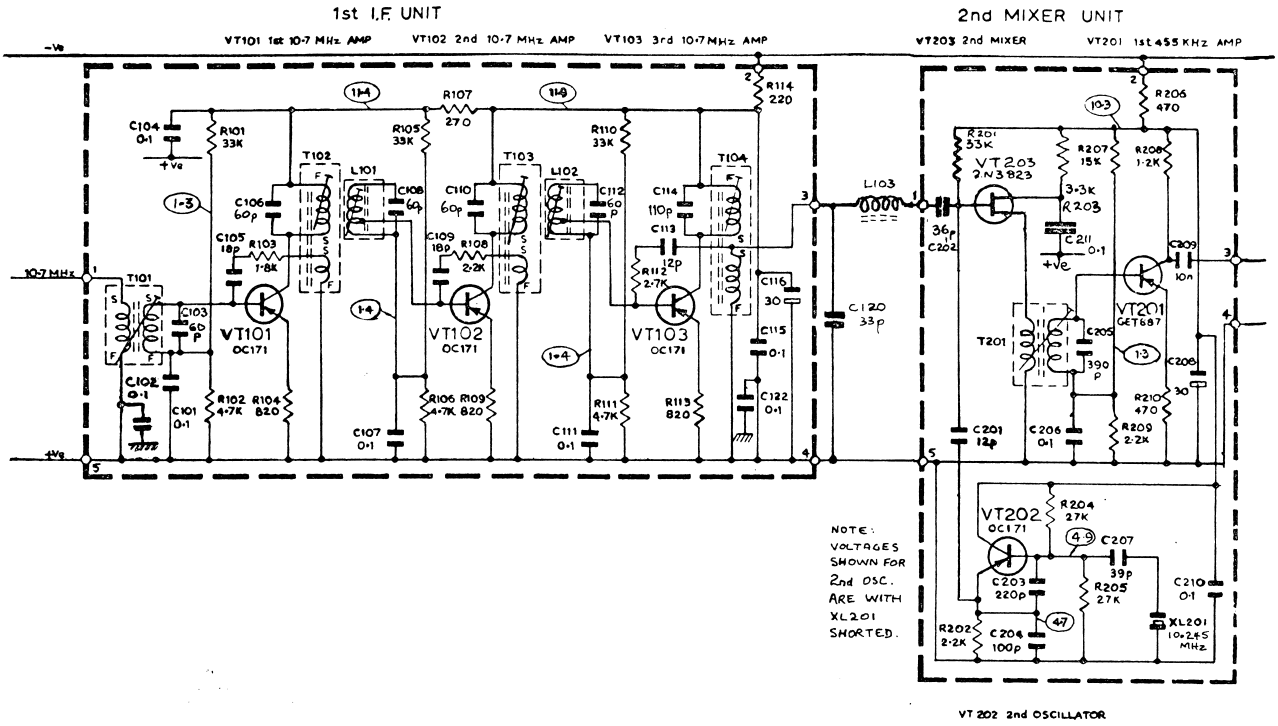

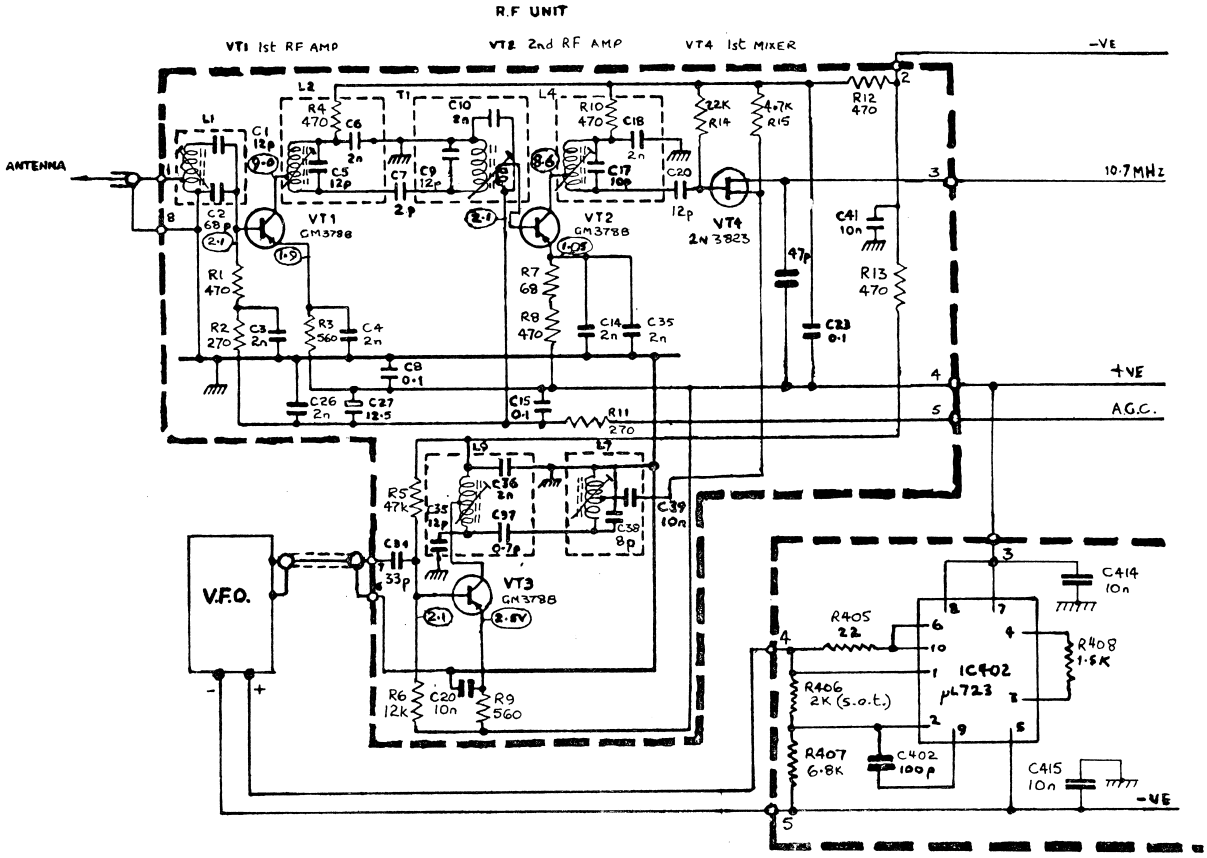

RECEIVER (PART)

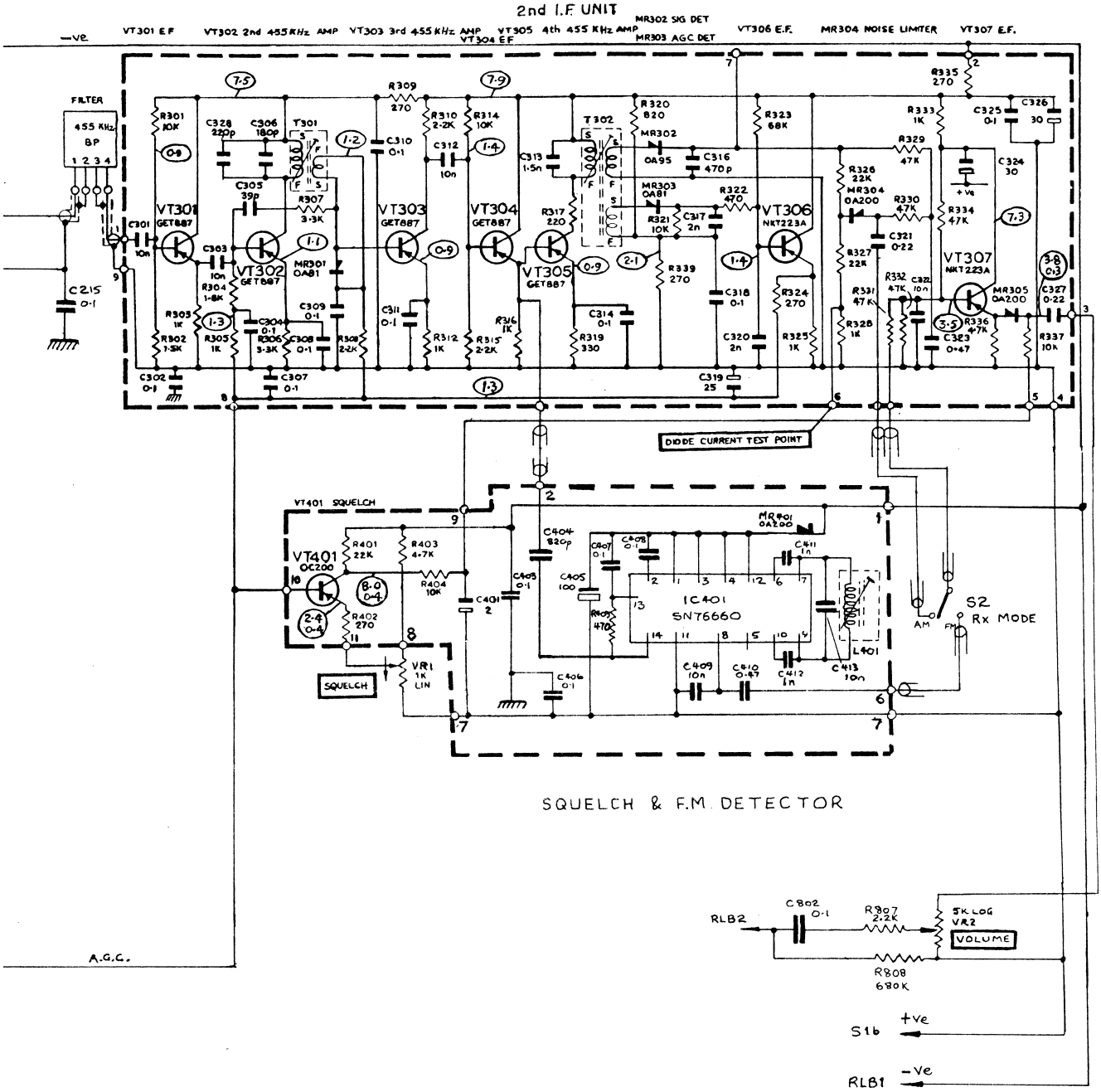

RECEIVER (PART)

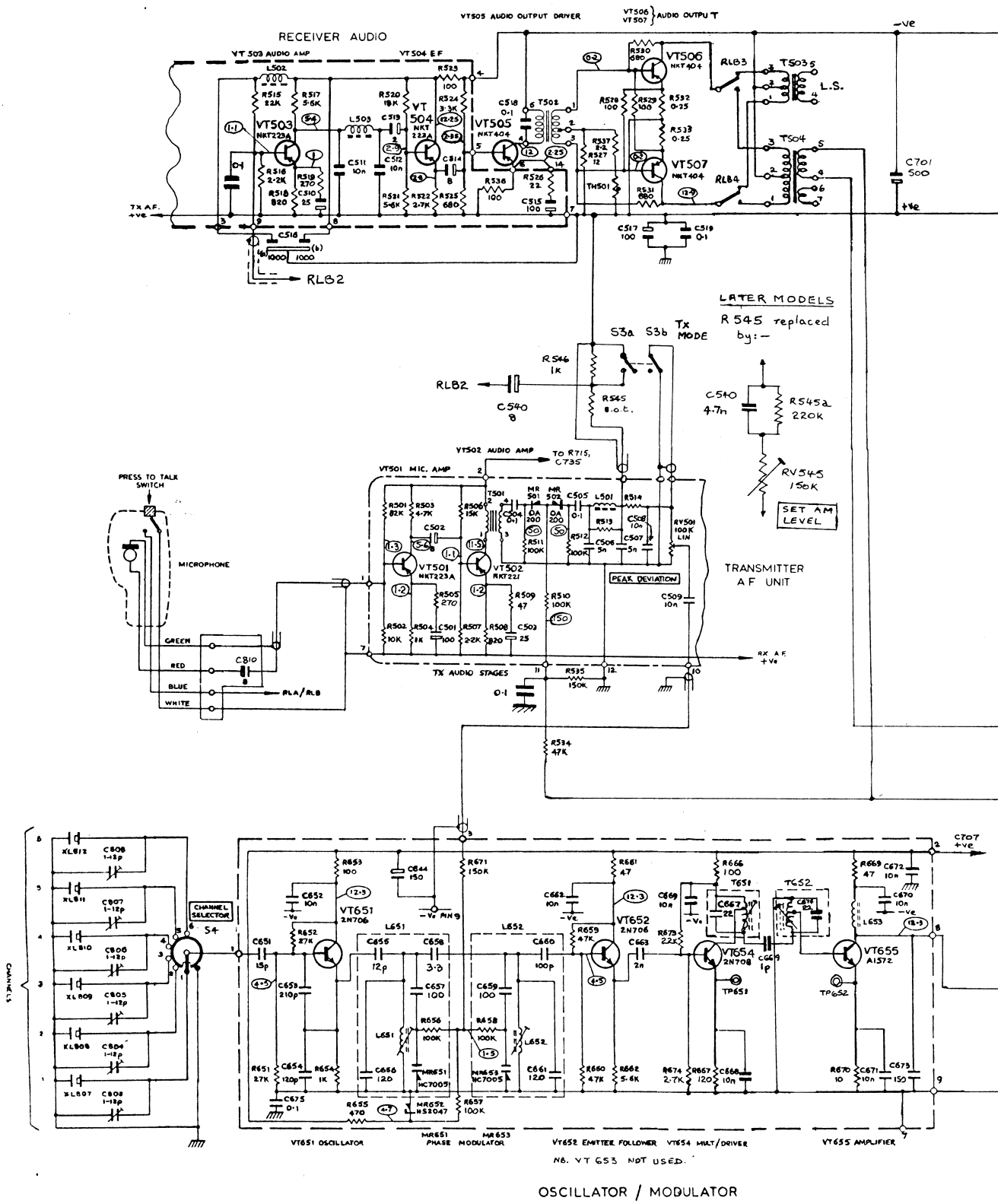

OSCILLATOR / MODULATOR

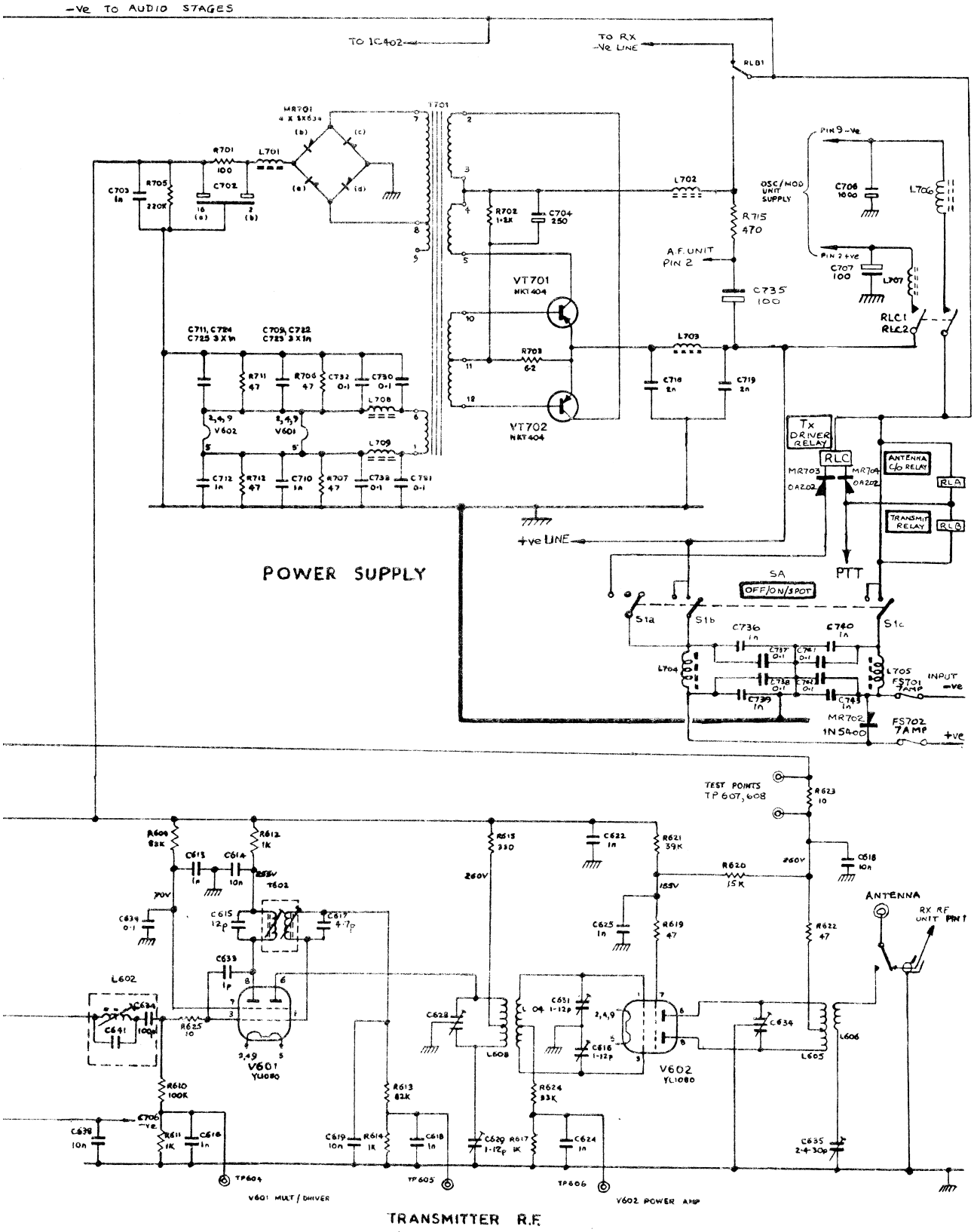
-ve TO AUDIO STAGES
TO IC402
TO RX -ve LINE
RLB1
MR701 4 X SX634
T701
R701 100
L701
C703 1n
R705 220K
C702 16
R702 1.2K
C704 250
VT701 MKT404
VT702 MKT404
R703 6.2
L702
R715 470
OSC/MOD UNIT SUPPLY
PIN 9 -ve
PIN 2 +ve
C706 1000
L706
C707 100
L707
A.F. UNIT PIN 2
C735 100
RLC1
RLC2
L703
C718 2n
C719 2n
C711, C724 C725 3 X 1n
C709, C722 C723 3 X 1n
R711 47
R706 47
C732 0.1
C730 0.1
L708
L709
V602
V601
C712 1n
R712 47
C710 1n
R707 47
C733 0.1
C731 0.1
+ve LINE
POWER SUPPLY
Tx DRIVER RELAY
RLC
MR703 OAZ202
MR704 OAZ202
ANTENNA C/O RELAY
RLA
TRANSMIT RELAY
RLB
PTT
SA OFF/ON/SPOT
S1a
S1b
S1c
C736 1n
C740 1n
L704
L705
FS701 7AMP
INPUT -ve
MR702 1N5400
FS702 7AMP
+ve
TEST POINTS TP 607, 608
R623 10
R609 82K
R612 1K
C613 1n
C614 10n
T602
70V
C634 0.1
C615 12p
C619 4.7p
C633 1p
L602
C632
C641 100p
R625 10
V601 YL1080
R610 100K
C706 -ve
C639 10n
R611 1K
C616 1n
TP604
V601 MULT / DRIVER
R613 82K
C619 10n
R614 1K
C618 1n
TP605
R615 330
260V
C622 1n
R621 39K
R620 15K
185V
C625 1n
R619 47
C628
L608
C631 1-12p
C616 1-12p
V602 YL1080
C620 1-12p
R617 1K
R624 33K
C624 1n
TP606
V602 POWER AMP
C618 10n
ANTENNA
RX RF UNIT PIN 1
R622 47
C634
L605
L606
C635 2.4-30p
TRANSMITTER R.F.

TONEBURST GENERATOR

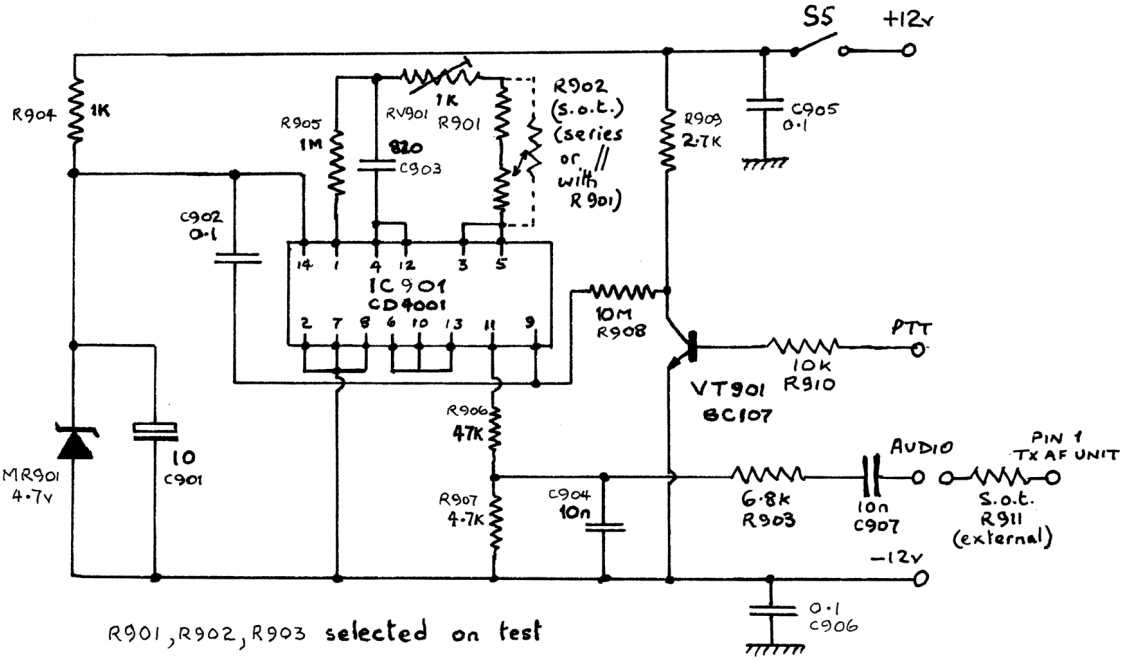

Circuit features

IC901 is a quad 2-input NOR gate. Two gates are used in an RC oscillator network with R901, R902, R905, RV901 and C903. The third and forth gates switch the output of the oscillator to the TX audio stages.

In the standby mode VT901 is non-conducting and C902 has both ends effectively connected to the positive supply rail via R908 and R909. It is thereby discharged resulting in the switching gates being open, allowing the tone to pass to the TX audio stages via the output attenuator R906, R907 and the de-emphasis network C904, R903.

When the PTT contact is made to the positive rail, VT901 is switched on, causing its collector potential to drop almost to zero. Then C902 then charges at a rate controlled by C908 until the logic level is reached when the switching gates change and then block the passage of the tone. The delay while C902 charges gives the length of the toneburst.

With switch S5 in the 'TONE (ON)' position, a toneburst will be transmitted automatically each time the PTT contact is operated.

Adjustment

Using a suitable frequency measuring instrument check the tone frequency. A suitable connection point, giving approximately 0.5V of audio, is across the 'peak deviation' potentiometer RV501 on the TX audio board. Disconnect the PTT lead from the toneburst generator at the microphone termination panel to disable the timing circuit. Set S5 in the 'TONE (ON)' position and operate the PTT contact. Adjust RV901 for the required frequency, typically 1750Hz.

R911 should be adjusted to give the required carrier deviation, having first set RV501 for normal speech levels.